TOLERANCES

BWE, FE, TRI-C & TUBE END F-F DIM ARE ±1/16"

ALL OTHER DIMENSIONS: ±1/2"

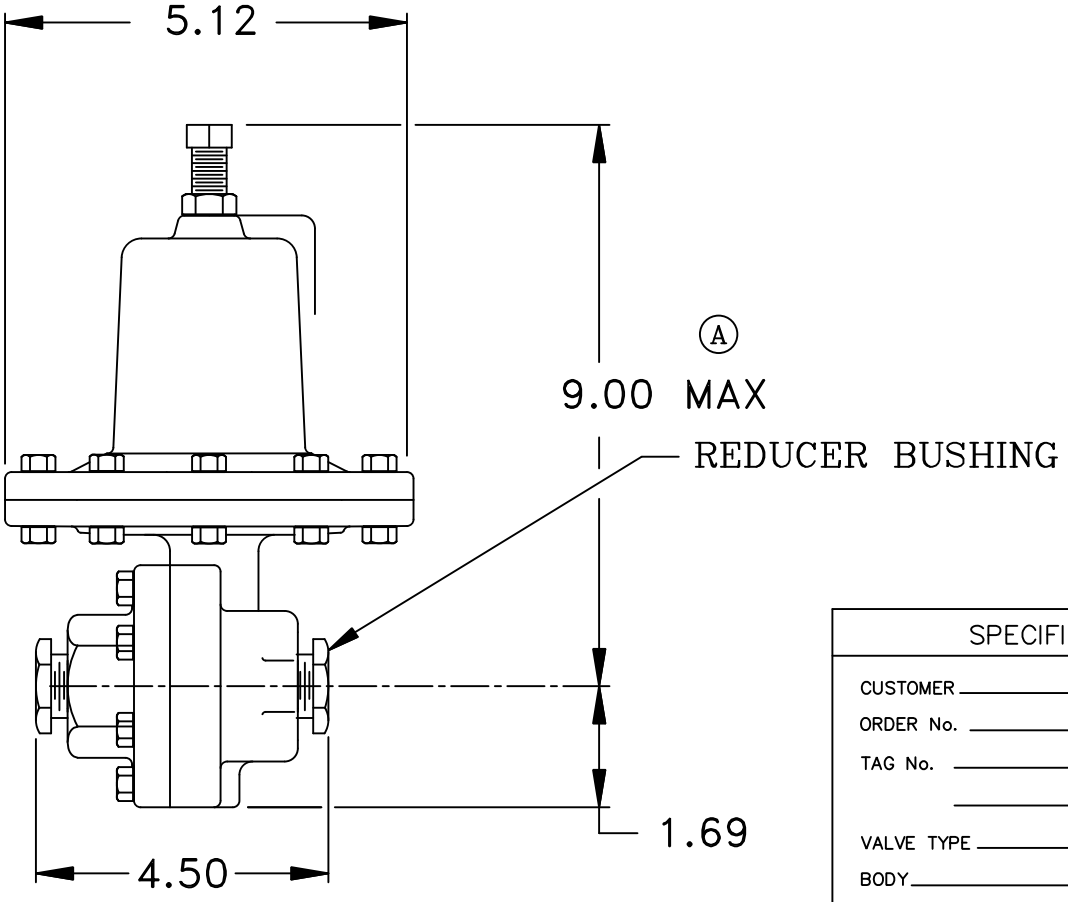


1/4–3/8"

# MK50 & 60

Wt.=10 lbs.

## SPECIFICATION DATA

CUSTOMER _____

ORDER No. _____ SERIAL No. _____

TAG No. _____

VALVE TYPE _____ QTY. _____

BODY _____

END CONN. _____

INLET PRESS. _____ MAX. △P _____

PRESS. RANGE _____ SET AT _____

VALVE ACTION: RISE IN PRESSURE TO ☐ OPEN ☐ CLOSE

VALVE SEAT _____ Cv _____

MISC. _____

CERTIFIED _____ DATE _____

JORDANVALVE
a division of Richards Industries
CINCINNATI, OHIO U.S.A
www.jordanvalve.com

| F.N.: MK50–025 | A | JEC 09085 | 9/16/09 | DW |
|---|---|---|---|---|

1/4–3/8" MARK 50 & 60
BACK PRESSURE REGULATOR & PRESSURE REDUCING VALVE.

| DRAWN BY | DATE |
|---|---|
| JLA | 6/1/99 |
| CHECKED BY | DATE |
| | |

MK50/60
1/4–3/8"