PRODUCT INFORMATION

KH53

FOR THE HARSHEST CONDITIONS – THE HEAVY-DUTY LINEAR ENCODER

Linear encoders

SICK
Sensor Intelligence.

FOR THE HARSHEST CONDITIONS - THE HEAVY-DUTY LINEAR ENCODER

Additional information

Product description

The POMUX KH53 non-contact linear encoder can measure absolute lengths up to 1,700 m. The encoder consists of two main components: The non-contact read head determines the absolute position using a series of measuring elements attached along the measurement path. Each measuring element consists of a number of permanent magnets. Since the distances between the magnets are unique, they can be used to develop an absolute measuring code. No reference run is required due to the absolute position being determined. The read head is passed parallel to these measuring elements at a distance of 25 mm or 55 mm. With a measuring length of up to 1,700 m, the KH53 is ideal for use in cranes, in storage and conveyor systems, and for railed vehicles. Due to the non-contact technology, this system works wear-free even in harsh ambient conditions,so that a long lifetime is ensured.

At a glance

- Non-contact length measurement – maintenance-free, rugged, long service life
- High reproducibility (0.3 mm / 1 mm), high system resolution (0.1 mm)
- SSI and PROFIBUS interfaces
- Determination of absolute position
- Measuring lengths of up to 1,700 m possible
- Can be used in harshest ambient conditions
- High traversing speeds of up to 6.6 m/s
- Distance tolerance between read head and measuring element: up to 55 mm ± 20 mm possible

Your benefits

- After installation, the system is immediately available and completely maintenance-free, which leads to time and cost savings
- Reliable determination of position under harshest ambient conditions such as the effects of dirt, dust, fog, shock, and vibration
- High efficiency and productivity
- Time savings – no reference run necessary on initial commissioning due to absolute position measurement
- Accurate positioning even with high mounting tolerances

➜ www.sick.com/KH53

For more information, simply enter the link or scan the QR code and get direct access to technical data, CAD design models, operating instructions, software, application examples, and much more.

8010310/2021-05-03
Subject to change without notice

Fields of application

- Position determination for container cranes in container terminals
- Positioning of the trolley on cranes
- Positioning of automated guided vehicles in storage and conveyor systems

Detailed technical data

Performance

	KH53	KH53 Advanced
Measuring length	0 m ... 38 m 0 m ... 107 m 0 m ... 354 m 0 m ... 1,700 m	0 m ... 54 m 0 m ... 548 m
Measuring range	38 m 107 m 354 m 1,700 m	54 m 548 m
Resolution	0.1 mm	
Traversing speed	6.6 m/s [1]	
Repeatability	0.3 mm	1 mm
Measurement accuracy	± 1000 + ME (Tu-25 °C) Tk µm [2]	± 2000 + ME (Tu-25° C) Tk µm [2]

[1] If the max. traversing speed is exceeded or if the measuring elements are left, the corresponding error message is triggered (with SSI: FF FF FE hex).

[2] If a positional tolerance of ± 1 mm is observed relative to the nominal distance in the N and Y directions within a measuring element relative to the starting point of this element ME = length of measuring element Tu = ambient temperature in °C. Tk = coefficient of thermal expansion (see “Mechanical data” table).

Interfaces

SSI

Communication interface	SSI
Position forming time	+ 0.8 ms
Interface, digital serial	SSI, 24 Bit, gray
Interface for parametrization	RS-422 Default OFF Four wire transmission, asynchrony, full duplex Data format: 1 start bit, 8 data bits, 1 stop bit, no parity Data protocol: ASCII, Baud rate 9600 RS-422

PROFIBUS DP

Communication interface	PROFIBUS DP [1]
Bus interface	RS-485, according to EN 50 170-2 (DIN 19245 Parts 1–3) electrically isolated by optocoupler
Position forming time	+ 1.1 ms
Address setting	0 ... 127, Hex switches or Protocol
Data protocol	PROFIBUS DP basic functions (DP-V0)
Bus termination	Via external switches
Set (electronic adjustment)	Via protocol
Encoder profile	Profile for encoders (07hex) – Class 2
Data transmission rate (baud rate)	9.6 kBaud ... 12 MBaud, Automatic detection
Status information	Operation (green LED) Bus activity (red LED)

[1] According to EN 50 170-2 (DIN 19245 Parts 1–3) electrically isolated by optocoupler.

Mechanical data

	KH53	KH53 Advanced
Weight		
Read head 38	2.4 kg	–
Read head 107	2.7 kg	–
Read head 354	3.6 kg	–
Read head 1700	5.2 kg	–
Read head 54	–	4.4 kg
Read head 548	–	6.7 kg
Measuring element up to 38 m	0.5 kg, per meter	–
Measuring element up to 54 m	–	0.65 kg, per meter
Measuring element up to 107 m	0.5 kg, per meter	–
Measuring element up to 354 m	0.5 kg, per meter	–
Measuring element up to 548 m	–	0.65 kg, per meter
Measuring element up to 1700 m	0.5 kg, per meter	–
Length of measuring element	See calculation example	
Position tolerance	± 10 mm, see positional tolerances diagram	± 20 mm, see positional tolerances diagram
Read head material		
Read head	AlMgSiPbF28	
Measuring element	AlMgSi0,5F22	

Electrical data

SSI

	KH53	KH53 Advanced
Initialization time	2 s	
Supply voltage	10 V ... 32 V	
Current consumption	250 mA	
Connection type		
	Male connector, M23, 12-pin	
	Cable, 12-wire, 1.5 m	–
	Cable, 12-wire, 3 m	–
	Cable, 12-wire, 5 m	
	Cable, 12-wire, 10 m	–
MTTFd: mean time to dangerous failure		
Measuring range up to 38 m	45 years (EN ISO 13849) [1]	–
Measuring range up to 107 meters	40 years (EN ISO 13849) [1]	–
Measuring range up to 354 meters	31 years (EN ISO 13849) [1]	–
Measuring range up to 1,700 meters	21 years (EN ISO 13849) [1]	–
Measuring range up to 54 meters	–	34 years (EN ISO 13849) [1]
Measuring range up to 548 meters	–	22 years (EN ISO 13849) [1]

[1] This product is a standard product and does not constitute a safety component as defined in the Machinery Directive. Calculation based on nominal load of components, average ambient temperature 40°C, frequency of use 8760 h/a. All electronic failures are considered hazardous. For more information, see document no. 8015532.

PROFIBUS DP

	KH53	KH53 Advanced
Initialization time	2 s	
Supply voltage	10 V ... 32 V	
Power consumption	2.5 W	

[1] This product is a standard product and does not constitute a safety component as defined in the Machinery Directive. Calculation based on nominal load of components, average ambient temperature 40°C, frequency of use 8760 h/a. All electronic failures are considered hazardous. For more information, see document no. 8015532.

	KH53	KH53 Advanced
Connection type	Male connector, 3xM12	
MTTFd: mean time to dangerous failure		
Measuring range up to 38 m	40 years (EN ISO 13849) [1]	–
Measuring range up to 107 meters	35 years (EN ISO 13849) [1]	–
Measuring range up to 354 meters	28 years (EN ISO 13849) [1]	–
Measuring range up to 1,700 meters	20 years (EN ISO 13849) [1]	–
Measuring range up to 54 meters	–	30 years (EN ISO 13849) [1]
Measuring range up to 548 meters	–	20 years (EN ISO 13849) [1]

[1] This product is a standard product and does not constitute a safety component as defined in the Machinery Directive. Calculation based on nominal load of components, average ambient temperature 40°C, frequency of use 8760 h/a. All electronic failures are considered hazardous. For more information, see document no. 8015532.

Ambient data

	KH53	KH53 Advanced
EMC	According to EN 61000-6-2 and EN 61000-6-4 [1]	
Enclosure rating		
SSI read head with male connector M23, 12-pin	IP65, with mating connector inserted (IEC 60529)	
SSI read head with cable	IP66 (IEC 60529)	
SSI read head with connector plug PROFIBUS	IP67, with mating connector inserted (IEC 60529)	
Operating temperature range	–20 °C ... +60 °C	–30 °C ... +70 °C
Storage temperature range	–40 °C ... +85 °C	
Resistance to shocks		
Read head	30 g, 10 ms (DIN EN 60 068-2-27)	
Measuring element	50 g, 10 ms (DIN EN 61000-2-27)	
Resistance to vibration		
Read head	10 g, 20 Hz ... 250 Hz (EN 60068-2-6)	
Measuring element	30 g, 20 Hz ... 250 Hz (DIN EN 61000-2-6)	

[1] EMC according to the standards quoted is achieved if shielded cables are used.

Ordering information

See dimension, calculation table and calculation example

KH53

Measuring range up to 38 meters

System part	Electrical interface	Code type	Connection type	Type	Part no.
Read head	PROFIBUS	–	3 x connector M12	KHK53-PXF00038	1036163
	SSI	–	Cable, 1.5 m	KHK53-AXR00038	1030048
			Cable, 10 m	KHK53-AXU00038	1030051
			Cable, 3 m	KHK53-AXS00038	1030049
			Cable, 5 m	KHK53-AXT00038	1030050
			Male connector M23, 12-pin	KHK53-AXB00038	1030052
Measuring element	–	Coded	–	KHT53-XXX00038	1030055
		Universal configurable	–	KHU53-XXX00038	1030056
Mounting gauge	–	–	–	KHM53-XXX00038	1030057

Measuring range up to 107 meters

System part	Electrical interface	Code type	Connection type	Type	Part no.
Read head	PROFIBUS	–	3 x connector M12	KHK53-PXF00107	1036164
	SSI	–	Cable, 1.5 m	KHK53-AXR00107	1030058
			Cable, 10 m	KHK53-AXU00107	1030061
			Cable, 3 m	KHK53-AXS00107	1030059
			Cable, 5 m	KHK53-AXT00107	1030060
			Male connector M23, 12-pin	KHK53-AXB00107	1030062
Measuring element	–	Coded	–	KHT53-XXX00107	1030065
		Universal configurable	–	KHU53-XXX00107	1030066
Mounting gauge	–	–	–	KHM53-XXX00107	1030067

Measuring range up to 354 meters

System part	Electrical interface	Code type	Connection type	Type	Part no.
Read head	PROFIBUS	–	3 x connector M12	KHK53-PXF00354	1036165
	SSI	–	Cable, 1.5 m	KHK53-AXR00354	1030068
			Cable, 10 m	KHK53-AXU00354	1030071
			Cable, 3 m	KHK53-AXS00354	1030069
			Cable, 5 m	KHK53-AXT00354	1030070
			Male connector M23, 12-pin	KHK53-AXB00354	1030072
Measuring element	–	Coded	–	KHT53-XXX00354	1030075
		Universal configurable	–	KHU53-XXX00354	1030076
Mounting gauge	–	–	–	KHM53-XXX00354	1030077

Measuring range up to 1,700 meters

System part	Electrical interface	Code type	Connection type	Type	Part no.
Read head	PROFIBUS	–	3 x connector M12	KHK53-PXF01700	1036166
	SSI	–	Cable, 1.5 m	KHK53-AXR01700	1030078
			Cable, 10 m	KHK53-AXU01700	1030081
			Cable, 3 m	KHK53-AXS01700	1030079
			Cable, 5 m	KHK53-AXT01700	1030080
			Male connector M23, 12-pin	KHK53-AXB01700	1030082
Measuring element	–	Coded	–	KHT53-XXX01700	1030085
		Universal configurable	–	KHU53-XXX01700	1030086
Mounting gauge	–	–	–	KHM53-XXX01700	1030087

KH53 Advanced

Measuring range up to 54 meters

System part	Electrical interface	Code type	Connection type	Type	Part no.
Read head	PROFIBUS	–	3 x connector M12	KHK53-PXF00054	1036167
	SSI	–	Cable, 5 m	KHK53-AXT00054	1035442
			Male connector M23, 12-pin	KHK53-AXB00054	1035443
Measuring element	–	Coded	–	KHT53-XXX00054	1035445
		Universal configurable	–	KHU53-XXX00054	1035446
Mounting gauge	–	–	–	KHM53-XXX00054	1035447

Measuring range up to 548 meters

System part	Electrical interface	Code type	Connection type	Type	Part no.
Read head	PROFIBUS	–	3 x connector M12	KHK53-PXF00548	1036168
	SSI	–	Cable, 5 m	KHK53-AXT00548	1035448
			Male connector M23, 12-pin	KHK53-AXB00548	1035449
Measuring element	–	Coded	–	KHT53-XXX00548	1035451
		Universal configurable	–	KHU53-XXX00548	1035452
Mounting gauge	–	–	–	KHM53-XXX00548	1035453

Dimensional drawings (Dimensions in mm (inch))

SSI read head

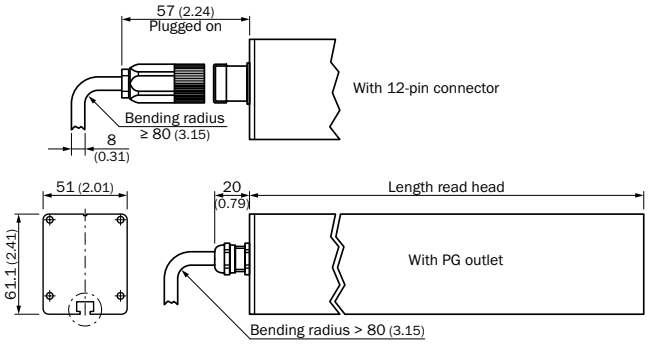

Read head PROFIBUS

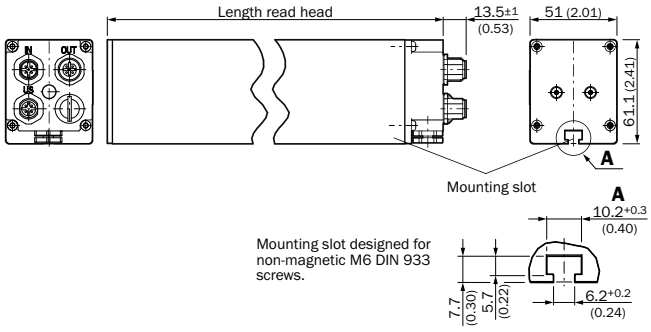

Measuring element

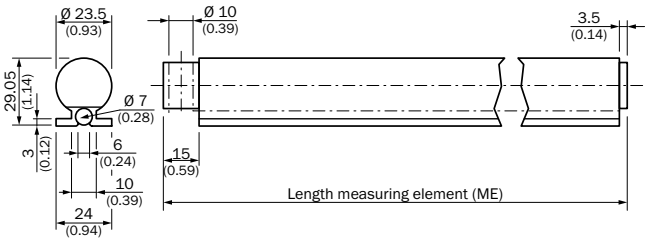

PIN assignment

SSI interface, view of M23 male device connector

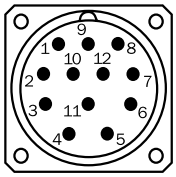

PIN	Signal	Wire colors (cable connection)	Explanation
1	GND	Blue	Ground connection
2	Data +	White	Interface signals
3	Clock +	Yellow	Interface signals
4	R x D +	Gray	RS-422 programming lines
5	R x D -	Green	RS-422 programming lines
6	T x D +	Pink	RS-422 programming lines
7	T x D -	Black	RS-422 programming lines
8	U_S	Red	Supply voltage
9	N.C.	Orange	Not assigned
10	Data -	Brown	Interface signals
11	Clock -	Violet	Interface signals
12	N.C.		Not assigned

PROFIBUS interface

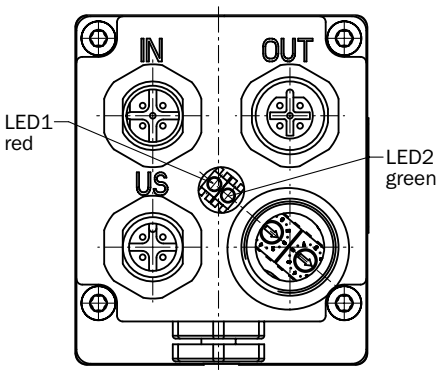

Male connector M12, 4-pin	Male connector M12, 5-pin	Female connector M12, 5-pin	Signal	Explanation
1	-	-	U_S	Supply voltage
3	-	-	GND	Ground connection
-	-	4	B	B-cable PROFIBUS DP (out)
-	-	2	A	A-cable PROFIBUS DP (out)
-	4	-	B	B-cable PROFIBUS DP (in)
-	2	-	A	A-cable PROFIBUS DP (in)
-	-	1	2P5[1)]	+ 5 V (potential free)
-	-	3	2M[1)]	0 V (potential free)
4	1	-	Not connected	-
2	3	-	Not connected	-
-	5	5	Screen	Housing potential

[1)] Use for external bus termination

Implementation

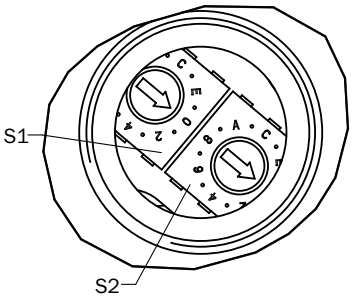

DP Functionalities

According to Profibus DP basic functionalities

DP services

- Data interchange (Write_Read_Data)
- Address allocation (Set_Slave_Address)
- Control commands (Global_Control)
- Read the inputs (Read_Inputs)
- Read the outputs (Read_Outputs)
- Reading diagnostic data (Slave_Diagnosis)
- Sending configuration data (Set_Param)
- Checking configuration data (Chk_Config

Communication

- Cyclic master-slave data traffic.

Protective mechanisms

- Transfer of data with HD = 4.
- Time monitoring of data traffic.

Configuration

Settings according to encoder profile

- Counting direction (CW, CCW)
- Class 2 functionality (ON, OFF)
- Scaling function (ON, OFF)
- “Activation of SSA-services” [2)]
- Selection of the station address [2)]

Setting: – Counting direction

- Via hardware via hex switch S2
- Via software via telegram

Counting direction increasing: Movement of the encoder from profile item n in the direction of profile item n+1.

Configuration

Setting the formats (IN/OUT) for the cyclic data interchange through a configuration byte (K-1).
2 words IN/OUT data (I-1/O-1) [1)]
4 words IN/OUT data (I-1, I-2, I-3/O-1) [2)]

Data interchange: – Input Data (IN)

I-1 Position value [1)] 4 bytes
I-2 Speed (0,1m/min) [2)] 2 bytes
I-3 Time stamp [2)] 2 bytes

Data interchange: – Output data (OUT)

O-1 PRESET Value [1)] 4 bytes

Diagnostic information

- Station related diagnostic (63 bytes according to encoder profile Class 2)

Setting: – PRESET value

The PRESET function is used for commissioning and the allocation of a particular position value to current physical positioning.
The following settings are possible:

- Via software: -- (see Output data)

Setting: – Station Address

- Via hardware via hex switch S1/S2
- Via software via telegram

Setting by software only occurs with prior activation of the “SSA service”.
The *.GS_ file is designed for automatic commissioning of the encoder. Within it all the characteristic features of the device are defined.
STEG05F6.GSD German
STEG05F6.GSE English

[1)] In accordance with encoder profile
[2)] Manufacturer specific function

Switch settings

The following settings are possible via hex switches:

- S1/S2 Address setting (0 ... 127)
- S2 Counting direction (CW/CCW)

Access is via a screw connection on the side of the read head male connector.
Status Information via LEDs

- LED-1 Bus activity (red)
- LED-2 Operating voltage (green)

General information

The KH53 PROFIBUS is an absolute length measurement system with a resolution of 100 µm. The bus coupling is inside the encoder and is an interface connection as PROFIBUS DP slave according to EN 50170 Vol. 2. Implementation is with the Siemens PROFIBUS ASIC SPC3.
The KH53 PROFIBUS contains all Class 2 functionalities according to the encoder profile (V1.1)

Implementation of the encoder is as a DP slave with the DP basic functions.
Conformity with PROFIBUS DP is ensured by a PNO certified test center.
The following options are available:

- M12 plug connector system

Position tolerance

Start of measuring path

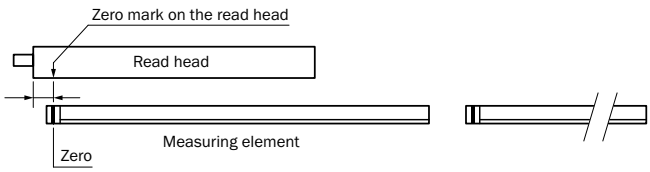

End of measurement path

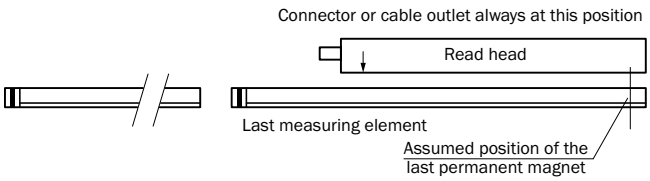

KH53

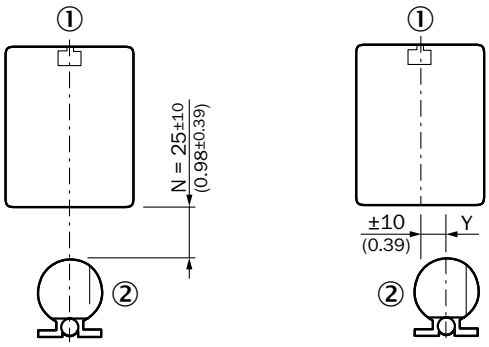

All dimensions in mm (inch)

The operating reliability and accuracy of the measuring system depends on (amongst other things) compliance with the position tolerances. Magnetic or magnetizable materials are not permitted within 80 mm of the encoder or the measuring element.

① Read head
② Measuring element

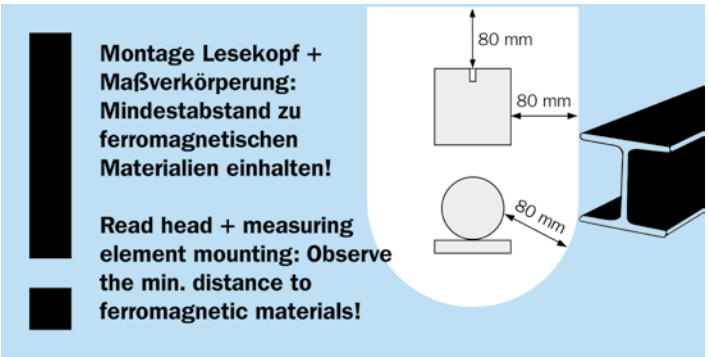

Only use non ferro-magnetic materials for the assembly base of the read head. A separation distance of 80 mm must be observed for ferro-magnetic materials (e.g., iron).

KH53 Advanced

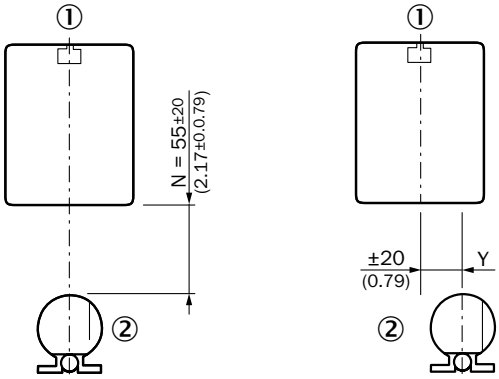

All dimensions in mm (inch)

The operating reliability and accuracy of the measuring system depends on (amongst other things) compliance with the position tolerances. Magnetic or magnetizable materials are not permitted within 80 mm of the encoder or the measuring element.

① Read head

② Measuring element

Dimensions and calculation table

KH53 SSI

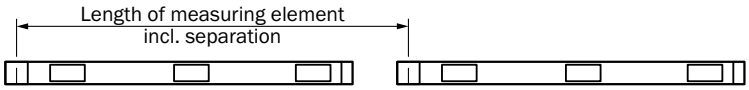

Measring range up to	Read head length	Length of measuring element including distance	Mounting systems per measuring element (suggestion)
39.90 m	0.866 m	2.304 m Identification letters A1 ... ≤ A18	4 clamp holders or 8 mounting brackets
107.40 m	1.051 m	1.8688 m Identification letters B1 ... ≤ B58	3 clamp holders or 6 mounting brackets
351.20 m	1.376 m	2.5088 m Identification letters C1 ... ≤ C141	4 clamp holders or 8 mounting brackets
1676.40 m	2.026 m	1.9072 m Identification letters D1 ... ≤ D880	3 clamp holders or 6 mounting brackets
The dimensions given are slightly rounded.			

KH53 SSI Advanced

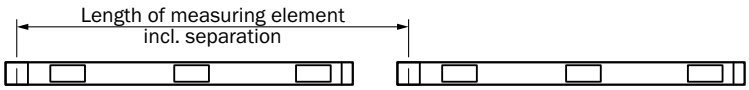

Measring range up to	Read head length	Length of measuring element including distance	Mounting systems per measuring element (suggestion)
53.50 m	1.58 m	1.408 m Identification letters F1 ... ≤ F39	3 clamp holders or 6 mounting brackets
546.40 m	2.506 m	2.3552 m Identification letters G1 ... ≤ G233	4 clamp holders or 8 mounting brackets
The dimensions given are slightly rounded.			

KH53 PROFIBUS

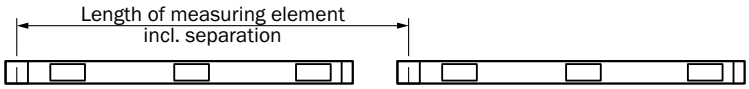

Measring range up to	Read head length	Length of measuring element including distance	Mounting systems per measuring element (suggestion)
39.90 m	0.905 m	2.304 m Identification letters A1 ... ≤ A18	4 clamp holders or 8 mounting brackets
107.40 m	1.070 m	1.8688 m Identification letters B1 ... ≤ B58	3 clamp holders or 6 mounting brackets
351.20 m	1.395 m	2.5088 m Identification letters C1 ... ≤ C141	4 clamp holders or 8 mounting brackets
1676.40 m	2.045 m	1.9072 m Identification letters D1 ... ≤ D880	3 clamp holders or 6 mounting brackets
The dimensions given are slightly rounded.			

KH53 PROFIBUS Advanced

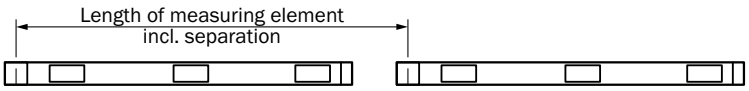

Measring range up to	Read head length	Length of measuring element including distance	Mounting systems per measuring element (suggestion)
53.50 m	1.599 m	1.408 m Identification letters F1 ... ≤ F39	3 clamp holders or 6 mounting brackets
546.40 m	2.525 m	2.3552 m Identification letters G1 ... ≤ G233	4 clamp holders or 8 mounting brackets
The dimensions given are slightly rounded.			

Calculation example regarding the KH53 SSI

Calculation example for a measurement distance of 100 m

Selected system with measuring range up to 107 m
Number of measuring elements required = measurement path + length of the read head / length of measurement element (measurement and calculation table)

- Number of measuring elements required = 101.051 m / 1.8688 m = 54.07
- Ordering amount therefore 55 measuring elements and 55 * 3 = 165 clamp holders
- If two separate measurement paths are to be implemented, then please order 2 x 55 measuring elements (not 110 measuring elements)

Attention! For position determination, the read head must not travel beyond the last measuring element.

Accessories

Mounting systems

Device protection (mechanical)

Protective caps

Figure	Brief description	Type	Part no.
	Stainless steel protective cover for KHK53 read head	BEF-AP-KHK	2094296

Dimensional drawings ➜ page 17

Mounting brackets and plates

Mounting brackets

Figure	Brief description	Type	Part no.
	Mounting bracket for KH53 measuring elements, without mounting hardware for the background	BEF-WK-KHT53	2029159

Dimensional drawings ➜ page 17

Terminal and alignment brackets

Terminal brackets

Figure	Brief description	Type	Part no.
	Spacer for KHT53, without mounting hardware for the background	BEF-KHA-KHT53	2042468

Dimensional drawings ➜ page 17

Linear encoders

Linear encoders

Figure		Brief description	Type	Part no.
	Mounting gauge	Mounting gauge for measuring range up to 38 meters	KHM53-XXX00038	1030057
		Mounting gauge for measuring range up to 107 meters	KHM53-XXX00107	1030067
		Mounting gauge for measuring range up to 354 meters	KHM53-XXX00354	1030077
		Mounting gauge for measuring range up to 1,700 meters	KHM53-XXX01700	1030087
		Mounting gauge for measuring range up to 54 meters	KHM53-XXX00054	1035447
		Mounting gauge for measuring range up to 548 meters	KHM53-XXX00548	1035453

Figure		Brief description	Type	Part no.
	Measuring element (universal configu-rable)	Measuring element universal configurable for measuring range up to 38 meters [1]	KHU53-XXX00038	1030056
		Measuring element universal configurable for measuring range up to 107 meters [1]	KHU53-XXX00107	1030066
		Measuring element universal configurable for measuring range up to 354 meters [1]	KHU53-XXX00354	1030076
		Measuring element universal configurable for measuring range up to 1,700 meters [1]	KHU53-XXX01700	1030086
		Measuring element universal configurable for measuring range up to 54 meters [1]	KHU53-XXX00054	1035446
		Measuring element universal configurable for measuring range up to 548 meters [1]	KHU53-XXX00548	1035452
	Measuring element (coded)	Measuring element coded for for measuring range up to 38 meters	KHT53-XXX00038	1030055
		Measuring element coded for for measuring range up to 107 meters	KHT53-XXX00107	1030065
		Measuring element coded for for measuring range up to 354 meters	KHT53-XXX00354	1030075
		Measuring element coded for for measuring range up to 1,700 meters	KHT53-XXX01700	1030085
		Measuring element coded for for measuring range up to 54 meters	KHT53-XXX00054	1035445
		Measuring element coded for for measuring range up to 548 meters	KHT53-XXX00548	1035451

[1] Not suitable for permanent use in the application.

Plug connectors and cables

Plug connectors and cables

Connecting cables

Figure	Brief description	Length of cable	Type	Part no.
	Head A: female connector, M12, 5-pin, straight, B-coded Head B: Flying leads Cable: PROFIBUS DP, twisted pair, PUR, halogen-free, shielded, 2 x 0.34 mm^2, 7.6 mm Signal type: PROFIBUS DP	5 m	DOL-1205-G05MQ	6026006
		10 m	DOL-1205-G10MQ	6026008
		12 m	DOL-1205-G12MQ	6032636
		15 m	DOL-1205-G15MQ	6032637
		20 m	DOL-1205-G20MQ	6032638
		30 m	DOL-1205-G30MQ	6032639
		50 m	DOL-1205-G50MQ	6032861
	Head A: female connector, M23, 12-pin, straight Head B: Flying leads Cable: SSI, RS-422, TTL, HTL, PUR, halogen-free, shielded, 4 x 2 x 0.25 mm^2 + 2 x 0.5 mm^2 + 2 x 0.14 mm^2, 7.8 mm Signal type: SSI, RS-422, TTL, HTL	3 m	DOL-2312-G03MMA1	2029201
		5 m	DOL-2312-G05MMA1	2029202
		10 m	DOL-2312-G10MMA1	2029203
		1.5 m	DOL-2312-G1M5MA1	2029200
	Head A: female connector, M23, 12-pin, straight Head B: Flying leads Cable: SSI, RS-422, PUR, halogen-free, shielded, 4 x 2 x 0.25 mm^2 + 2 x 0.5 mm^2 + 2 x 0.14 mm^2, 7.8 mm Signal type: SSI, RS-422	20 m	DOL-2312-G20MMA1	2029204
		30 m	DOL-2312-G30MMA1	2029205
	Head A: male connector, M12, 5-pin, straight, B-coded Head B: Flying leads Cable: PROFIBUS DP, twisted pair, PUR, halogen-free, shielded, 2 x 0.34 mm^2, 7.6 mm Signal type: PROFIBUS DP Details: wire shield Al-Pt film, overall shield C-screen tin-plated	5 m	STL-1205-G05MQ	6026005
		10 m	STL-1205-G10MQ	6026007
		12 m	STL-1205-G12MQ	6032635
	Head A: female connector, M12, 4-pin, straight, A-coded Head B: Flying leads Cable: Sensor/actuator cable, PVC, unshielded, 0.34 mm^2, 5 mm Signal type: Sensor/actuator cable	5 m	YF2A14-050VB3XLEAX	2096235

Field-attachable connectors

Figure	Brief description	Type	Part no.
	Head A: female connector, M12, 4-pin, straight Head B: - Cable: unshielded	DOS-1204-G	6007302
	Head A: female connector, M12, 5-pin, straight, B-coded Head B: - Cable: PROFIBUS DP, shielded Signal type: PROFIBUS DP	DOS-1205-GQ	6021353
 Illustration may differ	Head A: female connector, M23, 9-pin, straight Cable: HIPERFACE®, SSI, Incremental, shielded Signal type: HIPERFACE®, SSI, Incremental	DOS-2309-G	6028533
	Head A: female connector, M23, 12-pin, straight Head B: - Cable: HIPERFACE®, SSI, Incremental, shielded Signal type: HIPERFACE®, SSI, Incremental	DOS-2312-G DOS-2312-G02	6027538 2077057
	Head A: female connector, M23, 12-pin, angled Head B: - Cable: HIPERFACE®, SSI, Incremental, shielded Signal type: HIPERFACE®, SSI, Incremental	DOS-2312-W01	2072580
	Head A: male connector, M12, 5-pin, straight, B-coded Head B: - Cable: PROFIBUS DP, shielded Signal type: PROFIBUS DP	STE-1205-GQ	6021354
	Head A: male connector, M23, 12-pin, straight Head B: - Cable: HIPERFACE®, SSI, Incremental, RS-422, shielded Signal type: HIPERFACE®, SSI, Incremental, RS-422	STE-2312-G	6027537
 	Head A: male connector, M23, 12-pin, straight Head B: - Cable: HIPERFACE®, SSI, Incremental, shielded Signal type: HIPERFACE®, SSI, Incremental	STE-2312-G01 STE-2312-GX	2077273 6028548

Dimensional drawings ➜ page 19-21

Cables (ready to assemble)

Figure	Brief description	Type	Part no.
	Head A: Flying leads Head B: Flying leads Cable: PROFIBUS DP, PUR, shielded Signal type: PROFIBUS DP	LTG-2102-MW	6021355
	Head A: cable Head B: Flying leads Cable: SSI, Incremental, PUR, halogen-free, shielded, 4 x 2 x 0.25 mm^2 + 2 x 0.5 mm^2 + 2 x 0.14 mm^2, 7.8 mm Signal type: SSI, Incremental	LTG-2512-MW	6027531
	Head A: cable Head B: Flying leads Cable: SSI, TTL, HTL, Incremental, PUR, halogen-free, shielded, 4 x 2 x 0.25 mm^2 + 2 x 0.5 mm^2 + 2 x 0.14 mm^2, 7.8 mm, UV and saltwater-resistant Signal type: SSI, TTL, HTL, Incremental	LTG-2612-MW	6028516

Dimensional drawings ➜ page 18-19

Other connectors and cables

Figure	Brief description	Type	Part no.
	Head A: male connector, M12, 4-pin, straight, B-coded Cable: PROFIBUS DP, terminal resistor Signal type: PROFIBUS DP	STE-END-Q	6021156

Dimensional drawings ➜ page 21

Further accessories

Programming and configuration tools

Figure	Brief description	Type	Part no.
	Programming tool for ATM60, ATM90, and KH53	PGT-01-S	1030111

Dimensional drawings for accessories (Dimensions in mm (inch))

Mounting brackets and plates

BEF-WK-KHT53

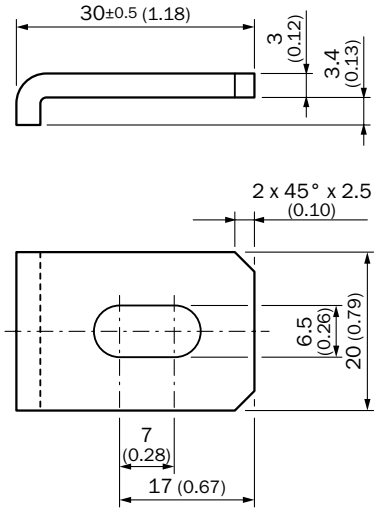

Device protection (mechanical)

BEF-AP-KHK

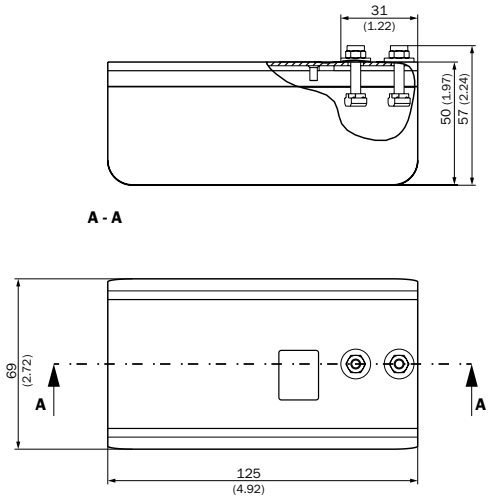

Terminal and alignment brackets

BEF-KHA-KHT53

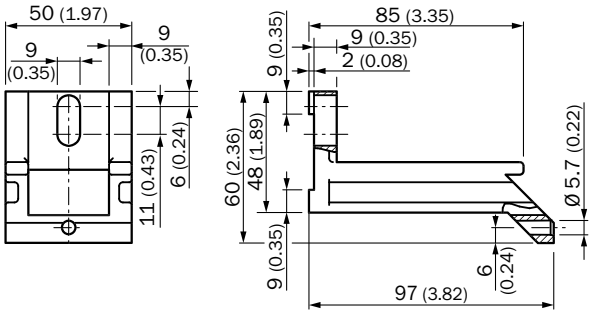

Linear encoders

Measuring element

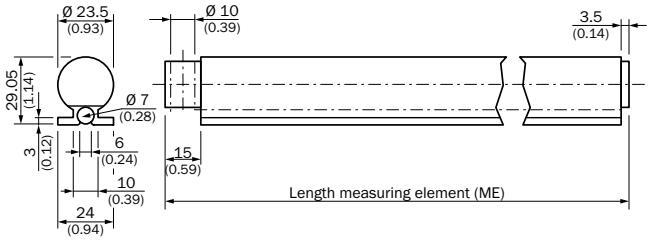

Plug connectors and cables

DOL-1205-GxxMQ

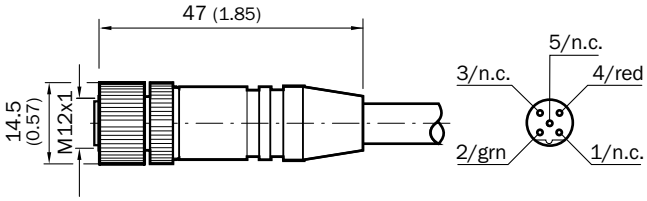

DOL-2312-G03MMA1

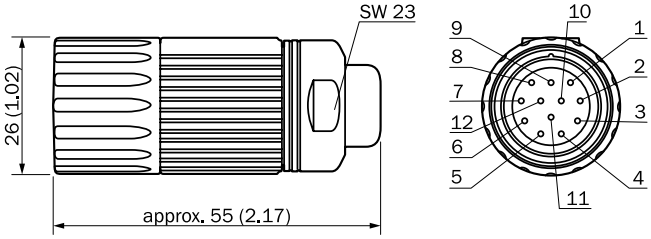

① Blue
② White
③ Yellow
④ Gray
⑤ Green
⑥ Pink
⑦ Black
⑧ Red
⑨ Orange
⑩ Brown
⑪ Purple
⑫ Orange/black

DOL-2312-G05MMA1

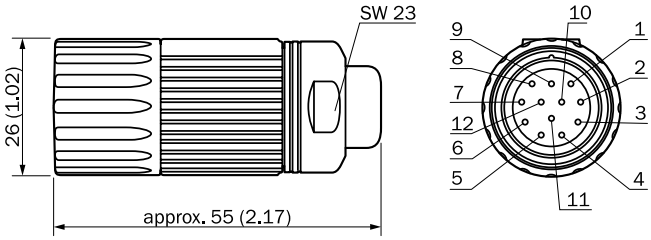

① Blue
② White
③ Yellow
④ Gray
⑤ Green
⑥ Pink
⑦ Black
⑧ Red
⑨ Orange
⑩ Brown
⑪ Purple
⑫ Orange/black

DOL-2312-G10MMA1

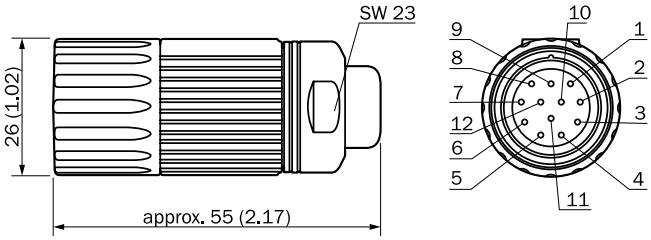

① Blue
② White
③ Yellow
④ Gray
⑤ Green
⑥ Pink
⑦ Black
⑧ Red
⑨ Orange
⑩ Brown
⑪ Purple
⑫ Orange/black

DOL-2312-G1M5MA1

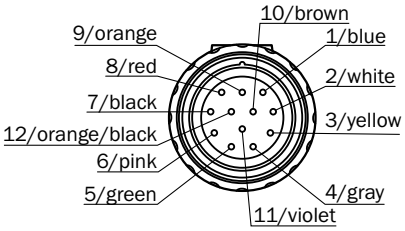

DOL-2312-G20MMA1

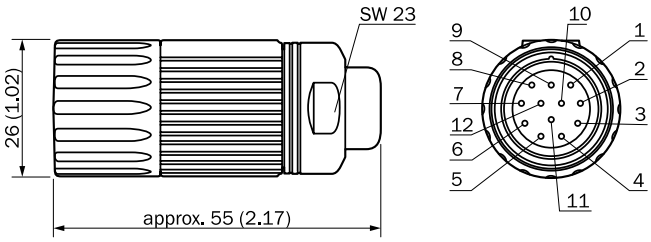

① Blue
② White
③ Yellow
④ Gray
⑤ Green
⑥ Pink
⑦ Black
⑧ Red
⑨ Orange
⑩ Brown
⑪ Purple
⑫ Orange/black

DOL-2312-G30MMA1

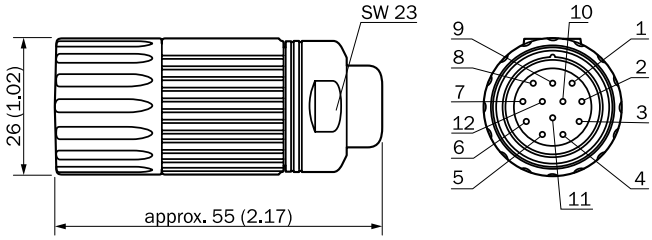

① Blue
② White
③ Yellow
④ Gray
⑤ Green
⑥ Pink
⑦ Black
⑧ Red
⑨ Orange
⑩ Brown
⑪ Purple
⑫ Orange/black

STL-1205-GxxMQ

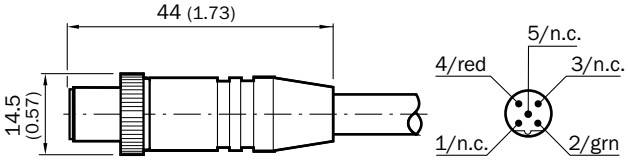

YF2A14-050VB3XLEAX

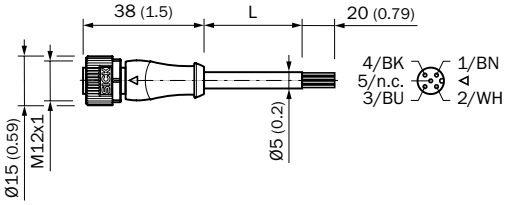

DOS-1204-G

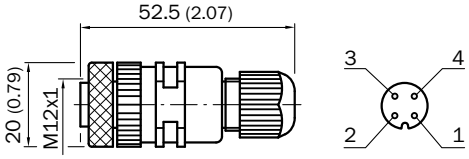

DOS-1205-GQ

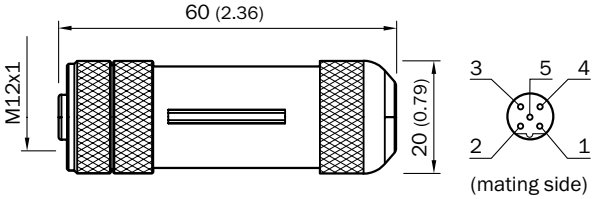

DOS-2309-G

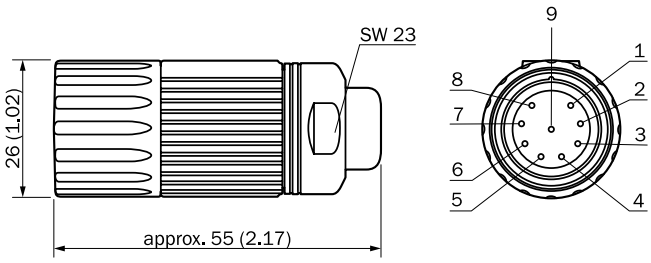

① Blue
② White
③ Yellow
④ Gray
⑤ Green
⑥ Pink
⑦ Black
⑧ Red
⑨ Orange

DOS-2312-G

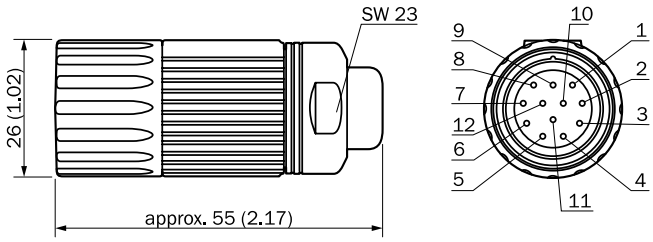

① Blue
② White
③ Yellow
④ Gray
⑤ Green
⑥ Pink
⑦ Black
⑧ Red
⑨ Orange
⑩ Brown
⑪ Purple
⑫ Orange/black

DOS-2312-G02

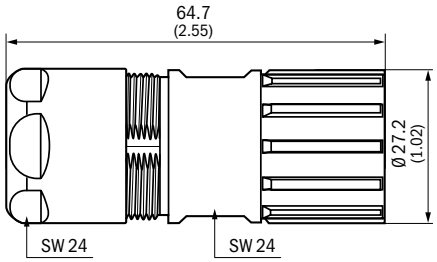

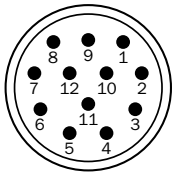

Plug insert
12 pin
(plug-in face)

DOS-2312-W01

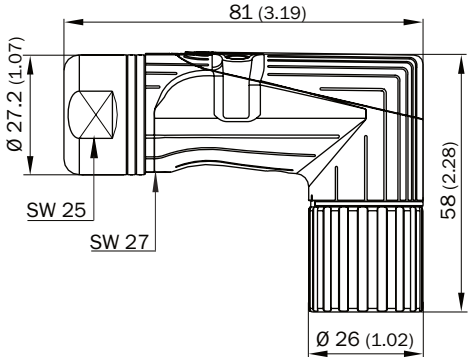

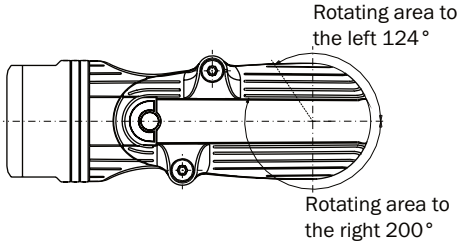

Main dimensions
Plug

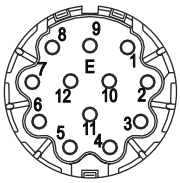

Contact arrangement
Mating view

STE-1205-GQ

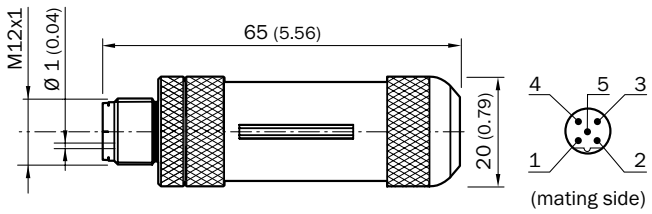

STE-2312-G

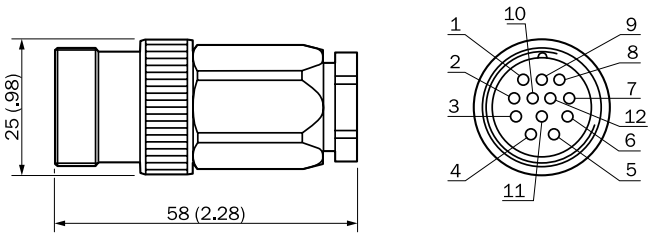

STE-2312-G01

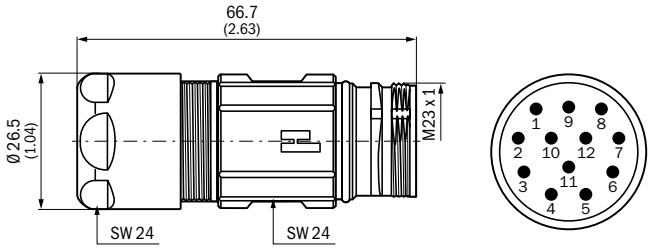

Pin insert
12 pin
(plug-in face)

STE-2312-GX

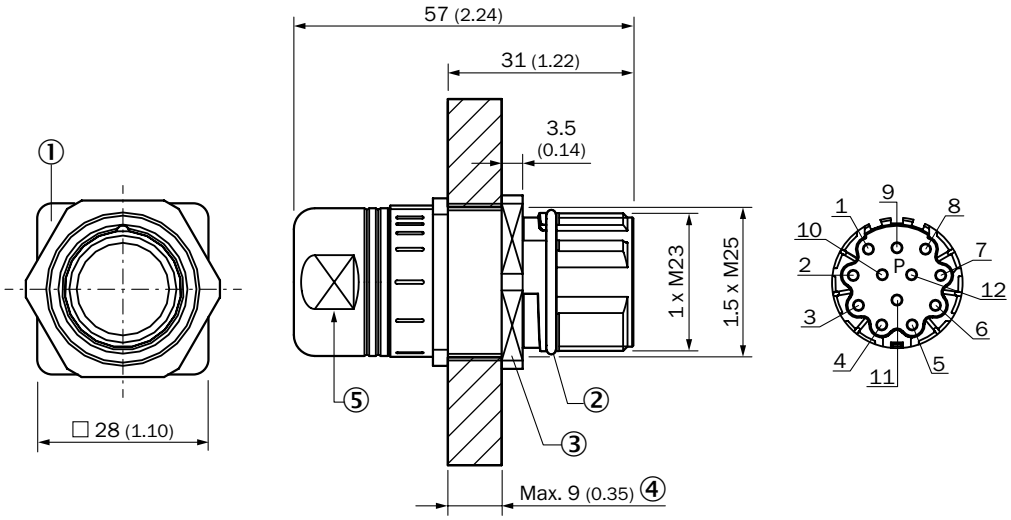

① Fixed stop position
② Vibration protection
③ Fixing nut SW30
④ Max. wall thickness
⑤ SW23

STE-END-Q

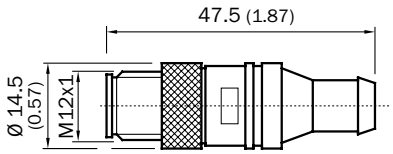

WORKING WITH SICK IN A DIGITAL WORLD

Making your digital business environment comfortable

Find a suitable solution in next to no time

- Online product catalog
- Application Solver
- Online configurators and selectors

My SICK is your personal self-service portal

- Open around the clock
- Clear product information
- Company-specific price conditions
- Convenience during the ordering process
- Document overview
- Availability and delivery times

Register now:
➜ www.sick.com/myBenefits

Even more value

- Digital Customer Trainings ➜ www.sick.com/c/g300887
- Digital Service Catalog ➜ cloud.sick.com
- SICK AppPool ➜ apppool.cloud.sick.com

SERVICES FOR MACHINES AND PLANTS: SICK LifeTime Services

Our comprehensive and versatile LifeTime Services are the perfect addition to the comprehensive range of products from SICK. The services range from product-independent consulting to traditional product services.

Consulting and design
Safe and professional

Product and system support
Reliable, fast, and on-site

Verification and optimization
Safe and regularly inspected

Upgrade and retrofits
Easy, safe, and economical

Training and education
Practical, focused, and professional

8010310/2021-05-03 · RA_07 · Pre USmod en51

SICK AT A GLANCE

SICK is a leading manufacturer of intelligent sensors and sensor solutions for industrial applications. With more than 10,400 employees and over 50 subsidiaries and equity investments as well as numerous agencies worldwide, SICK is always close to its customers. A unique range of products and services creates the perfect basis for controlling processes securely and efficiently, protecting individuals from accidents, and preventing damage to the environment.

SICK has extensive experience in various industries and understands their processes and requirements. With intelligent sensors, SICK delivers exactly what the customers need. In application centers in Europe, Asia, and North America, system solutions are tested and optimized in accordance with customer specifications. All this makes SICK a reliable supplier and development partner.

Comprehensive services round out the offering: SICK LifeTime Services provide support throughout the machine life cycle and ensure safety and productivity.

That is "Sensor Intelligence."

Worldwide presence:

Australia, Austria, Belgium, Brazil, Canada, Chile, China, Czech Republic, Denmark, Finland, France, Germany, Great Britain, Hungary, Hong Kong, India, Israel, Italy, Japan, Malaysia, Mexico, Netherlands, New Zealand, Norway, Poland, Romania, Russia, Singapore, Slovakia, Slovenia, South Africa, South Korea, Spain, Sweden, Switzerland, Taiwan, Thailand, Turkey, United Arab Emirates, USA, Vietnam.

Detailed addresses and further locations → www.sick.com

SICK
Sensor Intelligence.